CAM-10

IP68 Mini Commercial Camera

User Manual

ECHOMASTER

ECHOMASTER

15500 Lightwave Drive, Suite 202
Clearwater, Florida 33760

email - support@aampglobal.com (US)
email - technical.eu@aampglobal.com (Europe)

AAMP
DEFINE YOUR DRIVE

EchoMaster is a Power Brand of AAMP Global

EchoMaster.com

Introduction

Thank you for purchasing your EchoMaster automotive camera.

The following part numbers are supported:

- **CAM-10B-P**
- **CAM-10B-N**
- **CAM-10W-P**
- **CAM-10W-N**

EchoMaster cameras are designed to improve safety during driving by providing high quality images of surrounding areas and obstacles in the vicinity of the vehicle. They will also improve vehicle maneuvering capability by displaying blind spots not normally visible to the driver.

Please ensure you read and understand all aspects of this manual before fitting or using your EchoMaster Camera. Choose a suitable mounting place dependent on the application. Ensure that there are no wiring harnesses or hoses/pipes located behind this panel before drilling.

Key Features

- 1/4” CCD Sensor
- Operates at 0.5 LUX
- IP68 Rated
- 150 Degree Viewing Angle

Box Contents

- Camera
- Bracket
- Double-Sided Tape
- Mounting Hardware
- Harness
- Manual

Dimensions

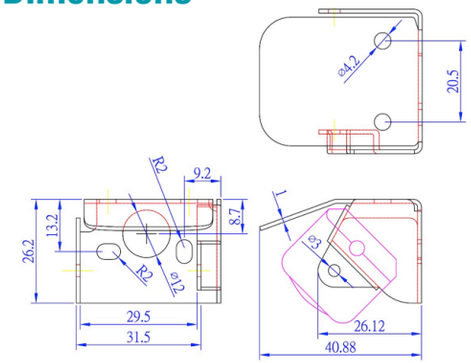

Speci ications

	CAM-10W-P I CAM-10W-N CAM-10B-P I CAM-10B-N	
Sensor Type	1/4” CCD	
LEDs	0	
Illumination	0.5 LUX	
Viewing Angle	150 degrees	
Mirror Image	YES	
Normal View	NO	
Water/Debris-Proof	IP68	
Audio	NO	
Power Supply	6-30V DC	
Current	<60mA	
Working Temperature	-20°C - +70°C	
Dimensions (mm)	D (41) x W (22) x H (27)	
System	PAL	NTSC
TV Lines	420	N/A
Resolution	680x512	N/A
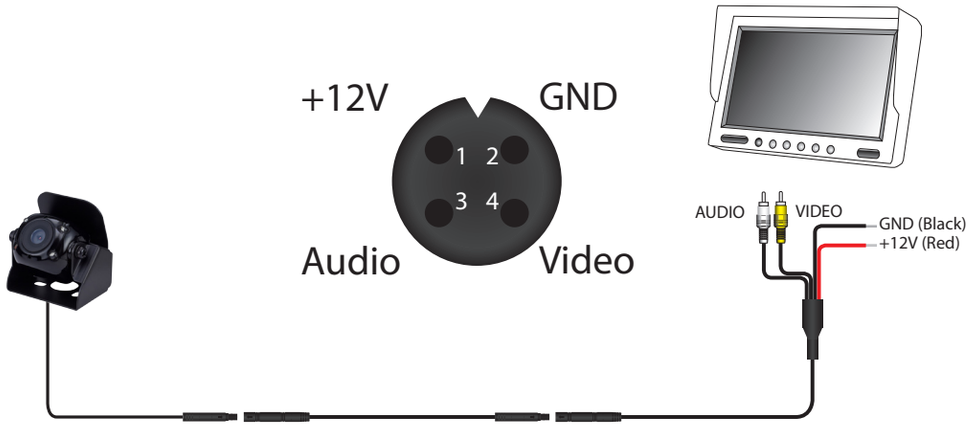
Wiring Diagram & Pin Out